AMERICAN GEM SOCIETY LABORATORIES™

*Setting the Highest Standard for Diamond Grading®*

# AMERICAN GEM SOCIETY LABORATORIES®

# *Diamond Quality™ Report*

**AGS** 104104659003

February 15, 2019

| Shape and Style | Oval Brilliant |
|---|---|
| Measurements: | 8.60 x 5.18 x 3.21 mm |
| Weight: | 1.040 cts. |

**Proportions**

| | |
|---|---|
| Total Depth: | 62.0% |
| Table: | 64.4% |
| Girdle: | Thin to Very Thick, Faceted |
| Culet: | Pointed |

**Finish**

| | |
|---|---|
| Polish: | Very Good |
| Symmetry: | Good |

| Color Grade | AGS 1.5 (G) |
|---|---|

| Clarity Grade | AGS 6 (SI2) |
|---|---|

**Comments**

Fluorescence: Negligible

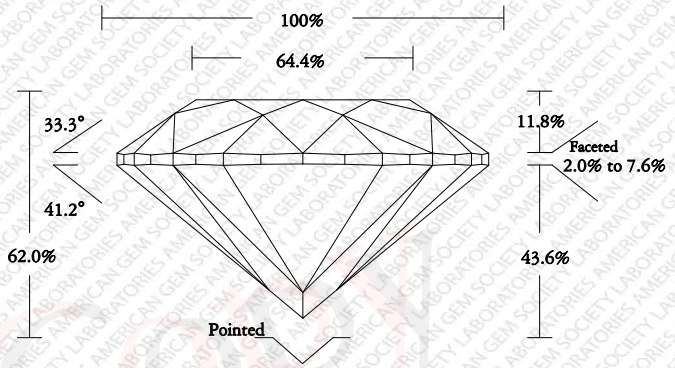


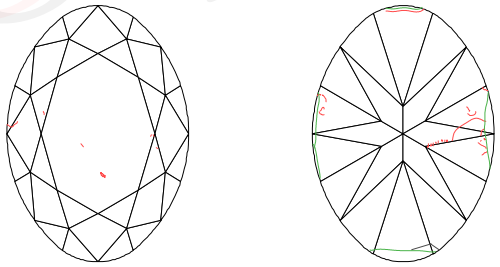

*Key to Symbols*

Feather
Crystal
Needle
Indented Natural
Natural
Extra Facet

**PLOT INFORMATION:** The Clarity grade is diagrammed using the clarity symbols contained in the *AGS Diamond Standards Manual*. Red marks indicate inclusions; green marks indicate external blemishes.

**Color Scale**

| | | | | | | | | | | | | | | | | | | | | | | | | |
|---|---|---|---|---|---|---|---|---|---|---|---|---|---|---|---|---|---|---|---|---|---|---|---|---|
| AGS | 0 | 0.5 | 1.0 | 1.5 | 2.0 | 2.5 | 3.0 | 3.5 | 4.0 | 4.5 | 5.0 | 5.5 | 6.0 | 6.5 | 7.0 | 7.5 | 8.0 | 8.5 | 9.0 | 9.5 | 10.0 | To | | Fancy Yellow |
| GIA | D | E | F | G | H | I | J | K | L | M | N | O | P | Q | R | S | T | U | V | W | X | Y | Z | Fancy Yellow |
| | COLORLESS | | | NEAR COLORLESS | | | | FAINT | | | VERY LIGHT | | | | | LIGHT | | | | | | | | |

**Clarity Scale**

| | | | | | | | | | | | |
|---|---|---|---|---|---|---|---|---|---|---|---|
| AGS | 0 | 1 | 2 | 3 | 4 | 5 | 6 | 7 | 8 | 9 | 10 |
| GIA | FLAWLESS / IF | VVS1 | VVS2 | VS1 | VS2 | SI1 | SI2 | | I1 | I2 | I3 |

**THIS REPORT IS NOT A WARRANTY, GUARANTEE, OR APPRAISAL OF VALUE.**

**IMPORTANT NOTICE:** All three quality factors of Cut, Color, and Clarity can dramatically affect the beauty and value of a diamond. Because of cutting, diamonds with the same color and clarity grades can vary in value by as much as 50% or more. Therefore, it is advisable to consult a Certified Gemologist® or other credentialed gemologist, before purchasing this Diamond.

THIS IS A REPRESENTATION OF THE ACTUAL DOCUMENT

**ORIGINAL**

Copyright © 1996-2006 American Gem Society Laboratories, LLC
All Rights Reserved.

# IMPORTANT LIMITATIONS

This Diamond Quality® Report ("Report") is not a guarantee, valuation, or appraisal and American Gem Society Laboratories, LLC ("AGS Labs") has made no representation or warranty regarding this Report or the value of the Diamond described herein. This Report contains a description of the characteristics of the Diamond based upon the application of the grading techniques, testing procedures, and equipment available to and used by AGS Labs at the time of its examination. Other descriptions of the Diamond may differ depending upon when, how and by whom the Diamond is graded, and may differ in the future as a result of changes and improvements in grading techniques and equipment. This Diamond has been graded using currently available technology and equipment.

AGS Labs makes no representation or warranty as to the HPHT treatment status of this Diamond. Any comment concerning HPHT treatment in this Report is *only an opinion* based upon tests performed using currently available technology.

AGS Labs can provide this Report for a relatively small fee compared to the present and potential value of the Diamond described herein only because this Report is subject to the following limitations on the liability of AGS Labs, and limitations described in the agreements by which this Report is made, all of which extend to the client for whom this Report was prepared and to every other person to whom this Report is distributed or shown.

> AGS LABS AND ITS EMPLOYEES AND AGENTS SHALL NOT BE LIABLE FOR ANY LOSS, DAMAGE, OR EXPENSE FOR ANY ERROR IN OR OMISSION FROM THIS REPORT OR FOR ITS ISSUANCE OR USE EVEN IF CAUSED BY OR RESULTING FROM THE NEGLIGENCE OR OTHER FAULT (EXCEPT FRAUD, WILLFUL MISCONDUCT, OR GROSS NEGLIGENCE) OF AGS LABS OR ITS EMPLOYEES OR AGENTS, AND SHALL NOT BE LIABLE FOR SPECIAL OR CONSEQUENTIAL DAMAGES FOR ANY ERROR OR OMISSION, CAUSED BY THE ACTS OF OTHERS, OR FOR ITS ISSUANCE OR USE EVEN IF ADVISED OF THE POSSIBILITY OF SUCH DAMAGES.

As a protection to the public and AGS Labs, neither this Report nor the name, trademarks or service marks of AGS Labs or its majority shareholder, American Gem Society®, may be used in whole or in part for purposes of advertising, publicity or promotion, and this Report may not be referred to as an appraisal. AGS Labs makes no representation or warranty of the origin of the Diamond described in this Report.

This Diamond was examined and tested using some or all of the following: Proportion analyzer, digital carat balance, master color comparison diamonds, optical comparator, standardized and specialized lighting, 10x magnification (fully corrected loupe and binocular microscope), long and short wave ultraviolet light, spectroscope and spectrophotometer.

The AGS GEMOLOGICAL LABORATORIES® logo, DIAMOND QUALITY®, SETTING THE HIGHEST STANDARD FOR DIAMOND GRADING®, and AMERICAN GEM SOCIETY LABORATORIES® are trademarks of American Gem Society Laboratories. The AGS GEMOLOGICAL LABORATORIES® logo and/or AMERICAN GEM SOCIETY LABORATORIES® have been registered in Benelux, Canada, Hong Kong, Israel, Japan, Mexico, Singapore, and the United States Patent and Trademark Office, with other countries pending. AGS, AGS IDEAL, and CERTIFIED GEMOLOGIST are trademarks or registered trademarks of American Gem Society, with registrations in Benelux, Hong Kong, Israel, Japan, Mexico, and/or the United States Patent and Trademark Office, with other countries pending.

**AMERICAN GEM SOCIETY LABORATORIES, LLC**
**8917 West Sahara Avenue, Las Vegas, Nevada 89117**
**Tel (702) 233-6120 Fax (702) 233-6125 support@agslab.com**
**www.agslab.com**