Setting the Highest Standard for Diamond Grading™

AMERICAN GEM SOCIETY LABORATORIES®

Diamond Quality™ Report

AGS 0009664101

August 27, 2012

Shape and Style	CC Rectangle Brilliant
Measurements:	10.34 x 8.84 x 6.41 mm
Weight:	5.038 cts.

Proportions

Total Depth:	72.5%
Table:	64.8%
Girdle:	Medium to Slightly Thick
Culet:	Pointed

Finish

Polish:	Excellent
Symmetry:	Very Good

Color Grade	AGS 3.0 (J)

Clarity Grade	AGS 6 (SI2)

Comments

Fluorescence: Negligible

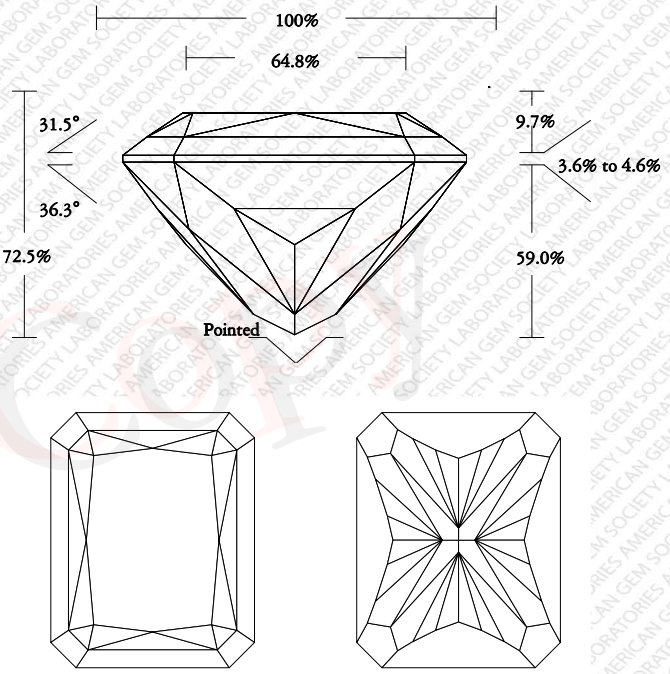

Key to Symbols

Crystal
Needle
Indented Natural
Feather

PLOT INFORMATION: The Clarity grade is diagrammed using the clarity symbols contained in the *AGS Diamond Standards Manual*. Red marks indicate inclusions; green marks indicate external blemishes.

Color Scale

AGS	0	0.5	1.0	1.5	2.0	2.5	3.0	3.5	4.0	4.5	5.0	5.5	6.0	6.5	7.0	7.5	8.0	8.5	9.0	9.5	10.0	To	Fancy Yellow
GIA	D	E	F	G	H	I	J	K	L	M	N	O	P	Q	R	S	T	U	V	W	X	Y	Z	Fancy Yellow
	COLORLESS			NEAR COLORLESS				FAINT			VERY LIGHT					LIGHT							

Clarity Scale

AGS	0	1	2	3	4	5	6	7	8	9	10
GIA	FLAWLESS / IF	VVS1	VVS2	VS1	VS2	SI1	SI2	I1		I2	I3

THIS REPORT IS NOT A WARRANTY, GUARANTEE, OR APPRAISAL OF VALUE.

IMPORTANT NOTICE: All three quality factors of Cut, Color, and Clarity can dramatically affect the beauty and value of a diamond. Because of cutting, diamonds with the same color and clarity grades can vary in value by as much as 50% or more. Therefore, it is advisable to consult a Certified Gemologist® or other credentialed gemologist, before purchasing this Diamond.

THIS IS A REPRESENTATION OF THE ACTUAL DOCUMENT

Copyright © 1996-2006 American Gem Society Laboratories, LLC
All Rights Reserved.